HSF RoHS

SPECIFICATIONS
Rated Current:2.0AMP
Contact Resistance:20mΩ Max
Withstand Voltage:500V AC/DC
Insulation Resistance:500MΩ Min
Operation Temperature:-40°c to +105°c

Contact Material:Phosphor bronze
Contact Plating:Au or Sn Over Ni
Insulator Material:Polyester(UL94V-0)
Resistance To Soldering Heat:
260° C±5° C, 10s(PA9T insulator)

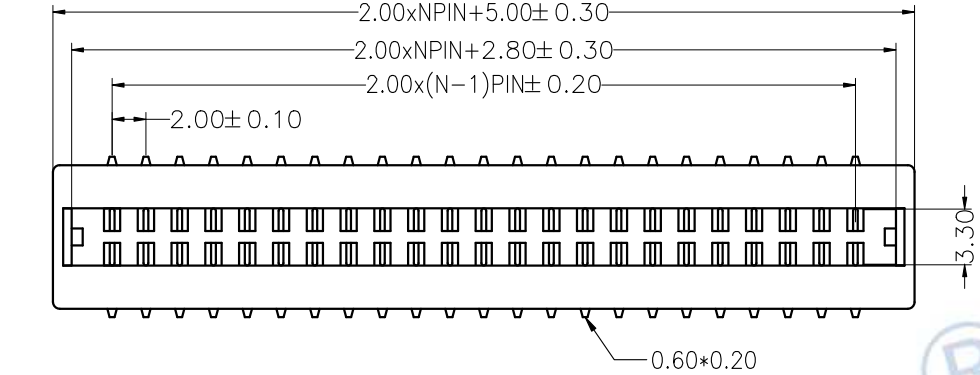

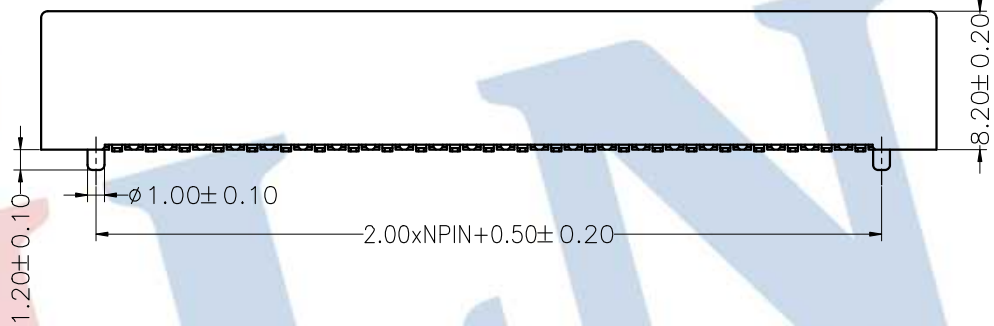

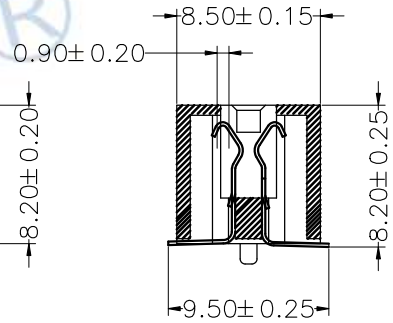

Ordering Information

4400- 2 XX M XX F E B W 0 X

No.of Pins
2x23P
2X25P

Contact Plating
G0:Gold Flash
G1:1U" Gold
G2:2U" Gold
G3:3U" Gold
G4:5U" Gold
G5:10U" Gold

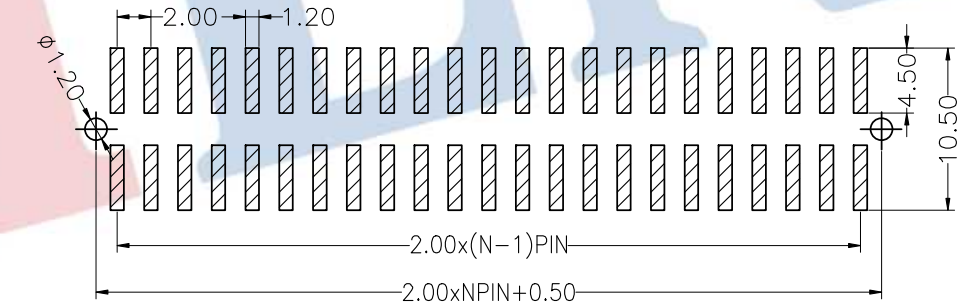

Recommended P.C.B Layout(Top Side)

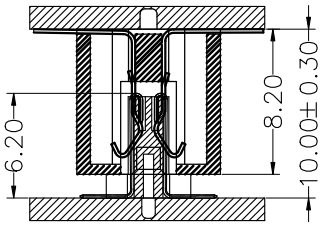

Mating Draw (Ref)

REV	DATE	MODIFICATION DESCRIPTION	CHANGE
A0	2021.07.29	NEW DRAWING	

OPERATION					
X.X	±0.30	DRAW	OuYangHui	21.07.29	
X.XX	±0.20	CHECK			
X.XXX	±0.10				
Angle	±3°	APPROVE			
DIM	TOL				

SCALE	FIT
UNIT	mm
SIZE	A4
SHEET	1/1
PROJ.	

JiLN® 深圳市锦凌电子有限公司
SHENZHEN JINLING ELECTRONICS CO.,LTD
Tel: 86-755-27483253 Fax: 86-755-2997-5588

PART NO.	4400-2XXMXXFEBW0X
TITLE:	2.0金手指连接器 2XNP 母座 SMT 带柱 H8.2